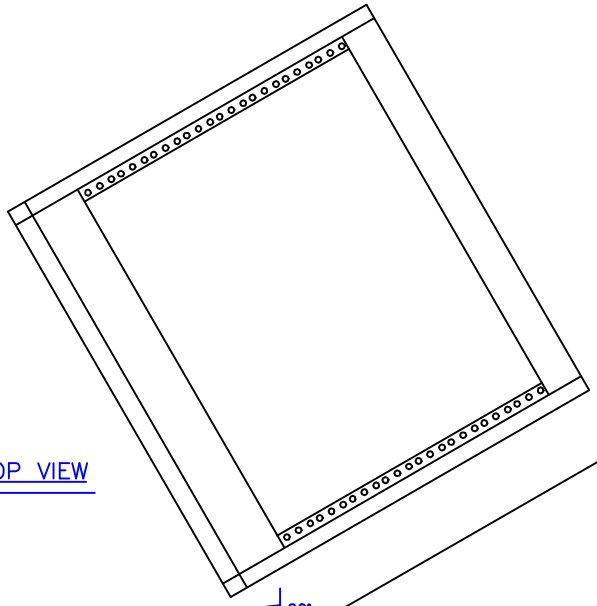


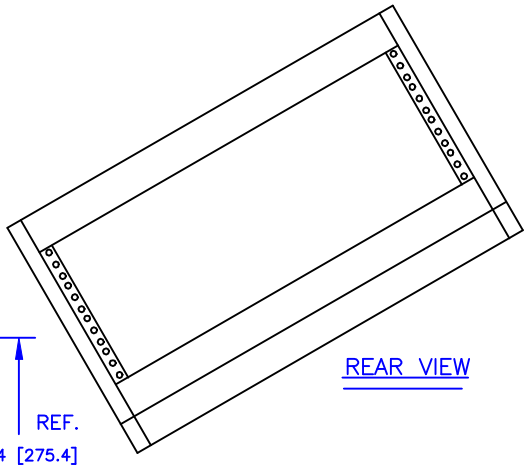


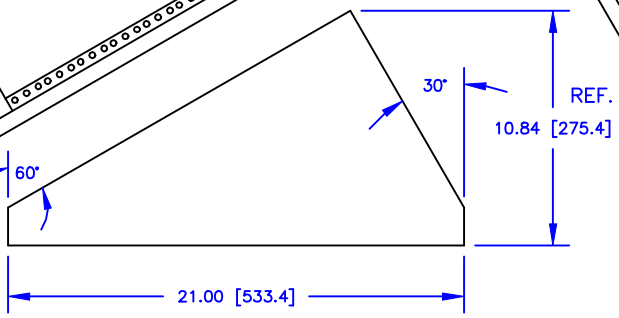


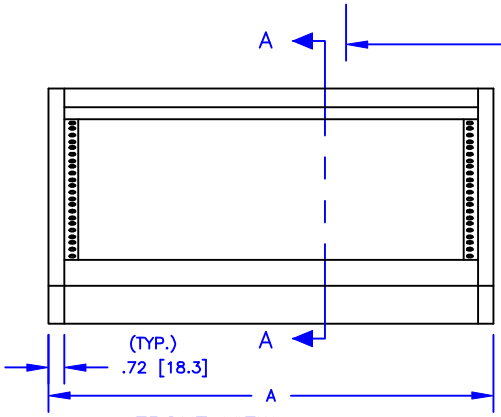


NOTES:

1) SEE PAGE B17, FOR PARTIAL SECTION THROUGH TURRET FRAME SIDE, SHOWING PANEL MOUNTING DETAILS

2) FOR TURRET MOUNTING DETAILS SEE PAGE B25.

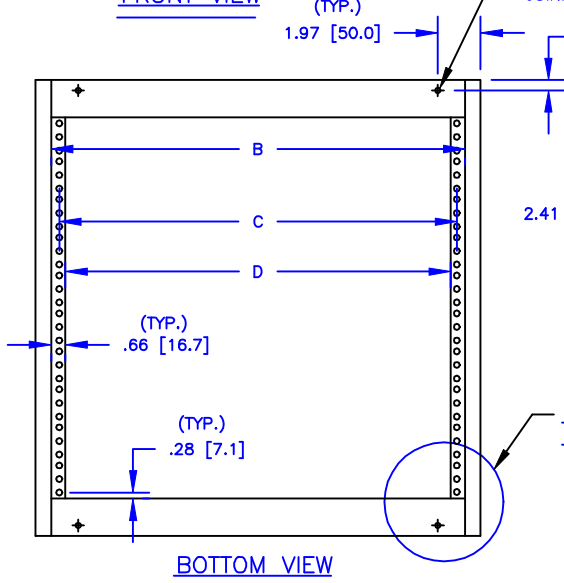


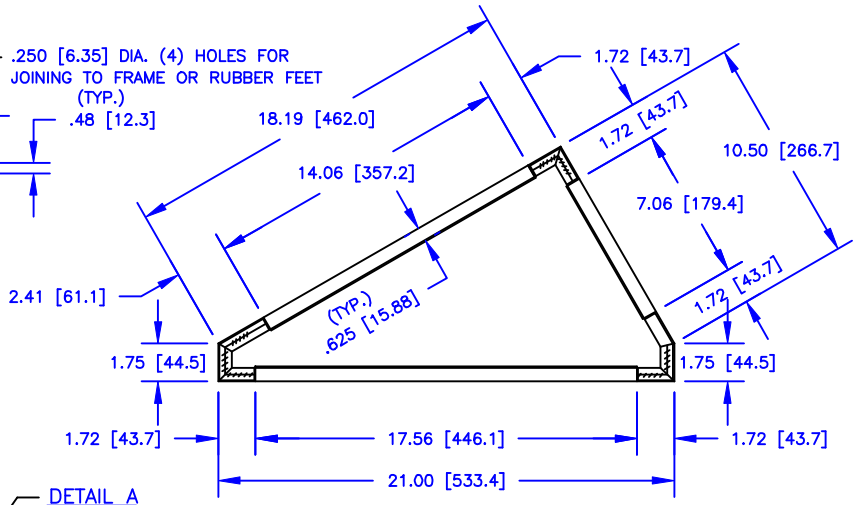


| PART NUMBER | A | B | C | D |
|---|---|---|---|---|
| 192–614–010 | 20.50 [520.7] | 19.06 [484.2] | 18.31 [465.1] | 17.75 [450.9] |
| 192–614–040 | 25.50 [647.7] | 24.06 [611.2] | 23.31 [592.1] | 22.75 [577.9] |

DIMENSIONS SHOWN INCHES [MILLIMETER]

TOLERANCES EXCEPT AS SHOWN .XXX ±.015 [.40] .XX ±.030 [.79]

THE INVENTION, DESIGN, DETAIL AND TECHNICAL DATA SHOWN IN THIS REPRODUCTION OF ONE OF OUR PROPRIETARY ENGINEERING DRAWINGS IS THE PROPERTY OF EQUIPTO ELECTRONICS CORPORATION AND MUST BE USED SOLELY IN CONSIDERING THE PURCHASE FROM EQUIPTO ELECTRONICS CORPORATION OF THE EQUIPMENT OR MATERIAL DESCRIBED. ALL RIGHTS IN RESPECT THERETO ARE, THRU THIS DECLARATION, EXPRESSLY RESERVED, SPECIFICALLY PRECLUDING THE COPYING IN WHOLE OR PART WITHOUT OUR WRITTEN CONSENT.

EQUIPTO ENCLOSURE SYSTEMS

# TURRET FRAMES, DOUBLE SLOPE, 14" [355.6] PANEL SPACE ON 60° SLOPE 7" [177.8] PANEL SPACE ON 30° SLOPE 19" [482.6] & 24" [609.6] WIDE PANELS